GR Series
WALK-IN

CONVIRON®

GR SERIES
WALK-IN

Product Overview/Applications

The GR series of walk-in rooms, available in six standard sizes, is a highly economical platform for providing a controlled environment in a walk-in configuration. This series of chamber offers low to moderate level light intensities using multiple light canopies. The temperature range is narrower than on other Conviron walk-in chambers which affords greater energy efficiency and economy. The multi-lamp-canopy configuration enables researchers to have several experiments running simultaneously with plants at varying levels of maturity.

Lighting

The standard lighting package for the GR series is a low to moderate level light intensity design that incorporates both T5 fluorescent and halogen incandescent lamps. This ensures a broad based light spectrum that is ideally suited for plant growth. Multiple lighting levels are provided with the ability to program lamp groups separately while the adjustable Lightright™ canopy enables the researcher to easily raise and lower the lamps to the desired height. Higher light intensities area available on this model.

Airflow

The airflow design directs air downward along the center aisle way. Air is then redirected returning upward between the plants and through the lamp canopies. Filtered and adjustable fresh air intake enables researchers to exchange air to the chamber in a controlled manner.

Refrigeration

Cooling for the GR series is provided by a self-contained water-cooled condensing unit with hot gas bypass for continuous compressor operation. An electronic modulating valve provides tight temperature control while ensuring quiet operation. Pressure transducers are included for monitoring the status of the refrigeration system. Alternative refrigeration methods are available depending on site-specific and/or user-defined requirements. Consult the factory for heat rejection information and other refrigeration options.

Experiment Protection

User programmable "set and forget" alarms track the chamber's operation versus user-defined set points. This allows for exceptionally accurate monitoring without the need for adjustment every time the set point is redefined. Backup "high/low" alarms provide a further level of protection while visual and audible notification is provided when any alarm is activated. Contacts for connection to a building management system are also included.

Key Product Attributes

- Multiple lamp canopies for varying plant maturity levels
- Efficient growth area-to-footprint ratio
- Economical platform
- *Lightright*™ for enhanced flexibility of light intensity
- Product certifications/markings; $_{C}$CSA$_{US}$ (NRTL), CE

Performance Data

	Temperature Range (°C)	Interior Capacity	Growth Area	Growth Height	Exterior Dimensions (WxDxH)	Light Intensities (6in. from lamp)	Electrical Service	Weight
GR48	15 – 35 lights on	320 ft³	48 ft²	80"	116" x 116" x 102.25"	600 µmoles/m²/s	120/208-3Ø-60Hz	4200lb.
	5 – 25 lights off	(9061 L)	(4.5 m²)	(2030 mm)	2950 x 2950 x 2600 (mm)	@ 25°C	230/400-3Ø-50Hz	(1905kg)
GR64	15 – 35 lights on	420 ft³	64 ft²	80"	139" x 116" x 102.25"	600 µmoles/m²/s	120/208-3Ø-60Hz	5340lb.
	5 – 25 lights off	(11900 L)	(5.9 m²)	(2030 mm)	3530 x 2950 x 2600 (mm)	@ 25°C	230/400-3Ø-50Hz	(2422kg)
GR96	15 – 35 lights on	640 ft³	96 ft²	80"	116" x 208" x 102.25"	600 µmoles/m²/s	120/208-3Ø-60Hz	6100lb.
	5 – 25 lights off	(18120 L)	(8.9 m²)	(2030 mm)	2950 x 5285 x 2600 (mm)	@ 25°C	230/400-3Ø-50Hz	(2768kg)
GR128	15 – 35 lights on	850 ft³	128 ft²	80"	139" x 208" x 102.25"	600 µmoles/m²/s	120/208-3Ø-60Hz	6800lb.
	5 – 25 lights off	(23960 L)	(11.9 m²)	(2030 mm)	3530 x 5285 x 2600 (mm)	@ 25°C	230/400-3Ø-50Hz	(3084kg)
GR144	15 – 35 lights on	960ft³	144 ft²	80"	116" x 300" x 102.25"	600 µmoles/m²/s	120/208-3Ø-60Hz	7150lb.
	5 – 25 lights off	(26800 L)	(13.5 m²)	(2030 mm)	2950 x 7620 x 2600 (mm)	@ 25°C	230/400-3Ø-50Hz	(3243kg)
GR192	15 – 35 lights on	1280ft³	192 ft²	80"	139" x 300" x 102.25"	600 µmoles/m²/s	120/208-3Ø-60Hz	7850lb.
	5 – 25 lights off	(36000 L)	(18 m²)	(2030 mm)	3530 x 7620 x 2600 (mm)	@ 25°C	230/400-3Ø-50Hz	(3561kg)

CONVIRON®

CONVIRON MODEL **GR SERIES**

NOTES:

1. STANDARD REFRIGERATION SYSTEM IS WATER COOLED (3/4"Ø (19mmØ) CONNECTION).
2. CONDENSING UNIT REQUIRES SEPERATE ELECTRICAL SERVICE (60HZ APPLICATION ONLY).
3. DEPTH DIMENSION IS CHAMBER SIZE ONLY. DIMENSION DOES NOT INCLUDE DOOR LATCH.
4. LENGTH AND WIDTH DIMENSIONS ±1/4 (6mm). HEIGHT DIMENSION ±1" (25mm).

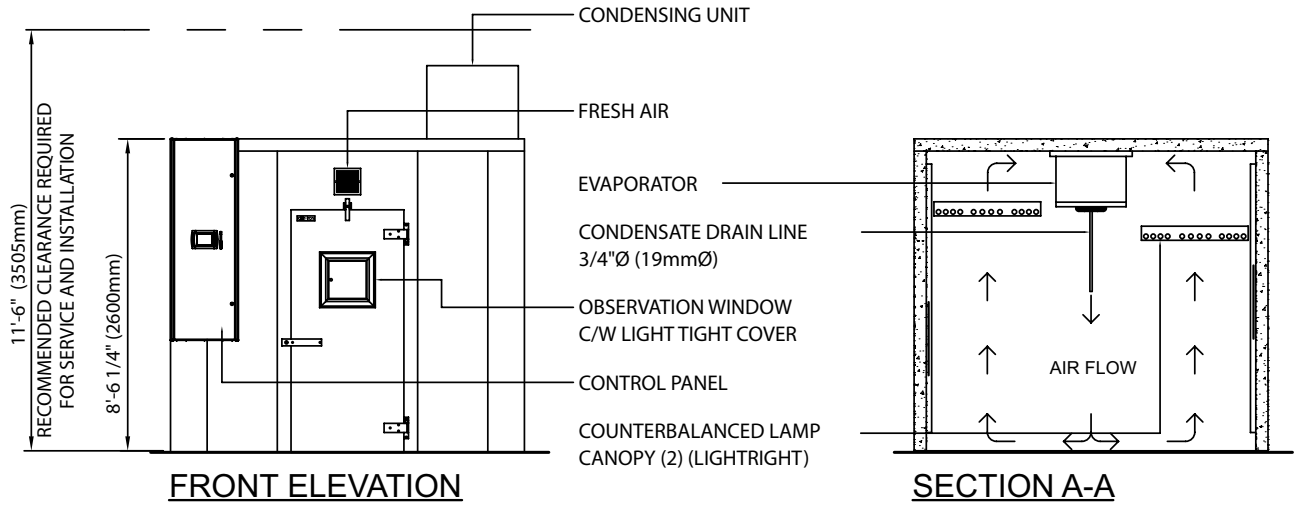

FRONT ELEVATION

SECTION A-A

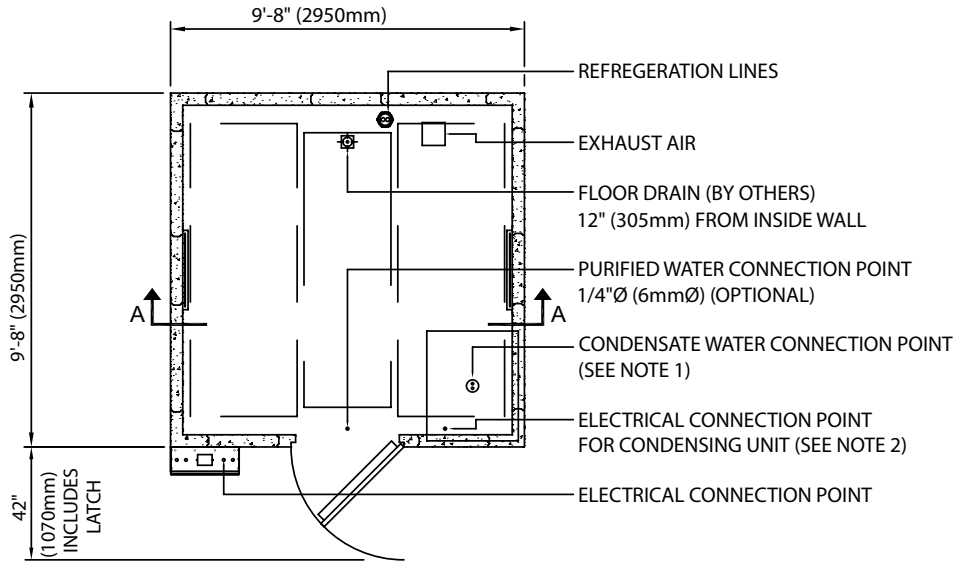

PLAN VIEW

GR48 PLANT GROWTH CHAMBER
DATE ISSUED: 10/20/09
DRAWING NO. 231179

CONVIRON®

CONVIRON MODEL **GR SERIES**

NOTES:

1. STANDARD REFRIGERATION SYSTEM IS WATER COOLED (3/4"Ø (19mmØ) CONNECTION).
2. CONDENSING UNIT REQUIRES SEPERATE ELECTRICAL SERVICE (60HZ APPLICATION ONLY).
3. DEPTH DIMENSION IS CHAMBER SIZE ONLY. DIMENSION DOES NOT INCLUDE DOOR LATCH.
4. LENGTH AND WIDTH DIMENSIONS ±1/4 (6mm). HEIGHT DIMENSION ±1" (25mm).

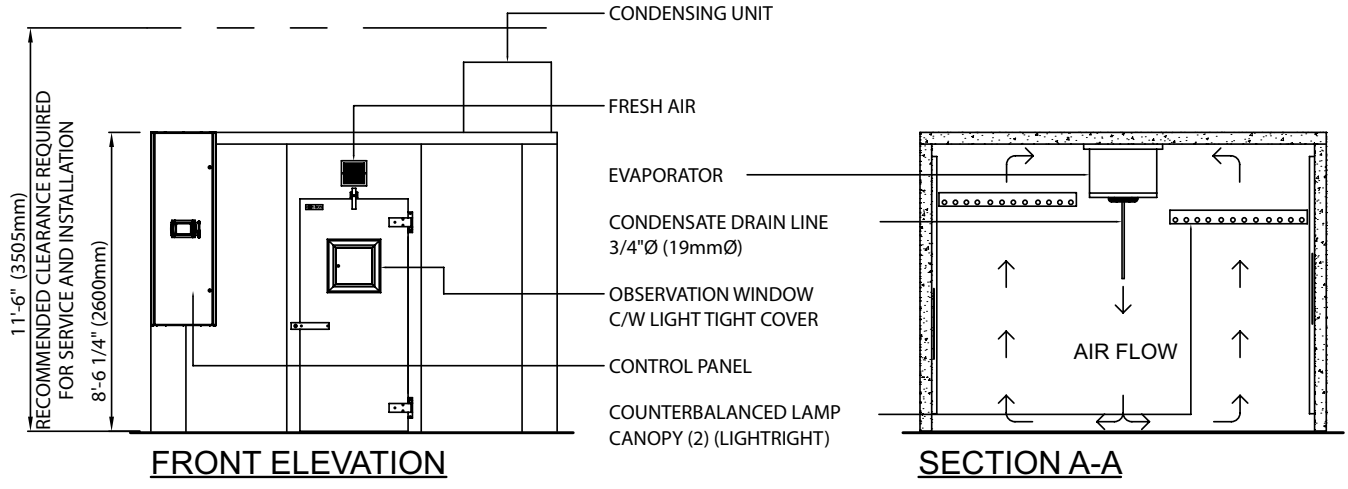

FRONT ELEVATION

SECTION A-A

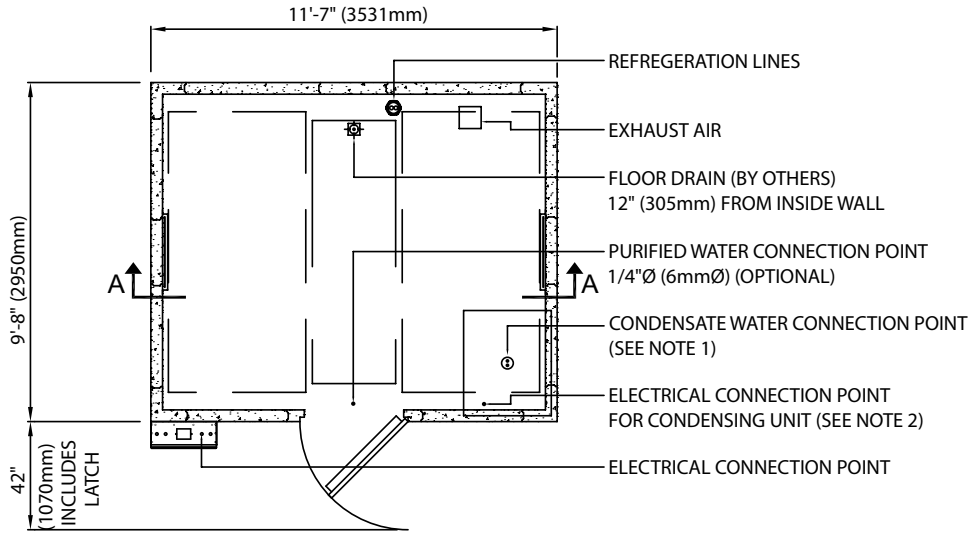

PLAN VIEW

GR64 PLANT GROWTH CHAMBER
DATE ISSUED: 10/20/09
DRAWING NO. 231180

CONVIRON®

CONVIRON MODEL **GR SERIES**

NOTES:

1. STANDARD REFRIGERATION SYSTEM IS WATER COOLED (3/4"Ø (19mmØ) CONNECTION).
2. CONDENSING UNIT REQUIRES SEPERATE ELECTRICAL SERVICE (60HZ APPLICATION ONLY).
3. DEPTH DIMENSION IS CHAMBER SIZE ONLY. DIMENSION DOES NOT INCLUDE DOOR LATCH.
4. LENGTH AND WIDTH DIMENSIONS ±1/4 (6mm). HEIGHT DIMENSION ±1" (25mm).

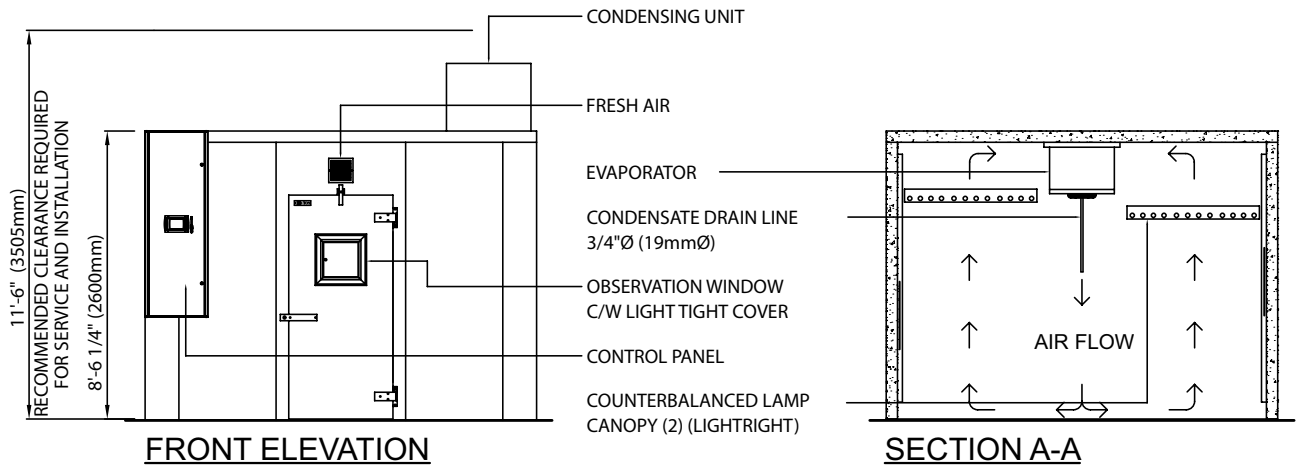

FRONT ELEVATION

SECTION A-A

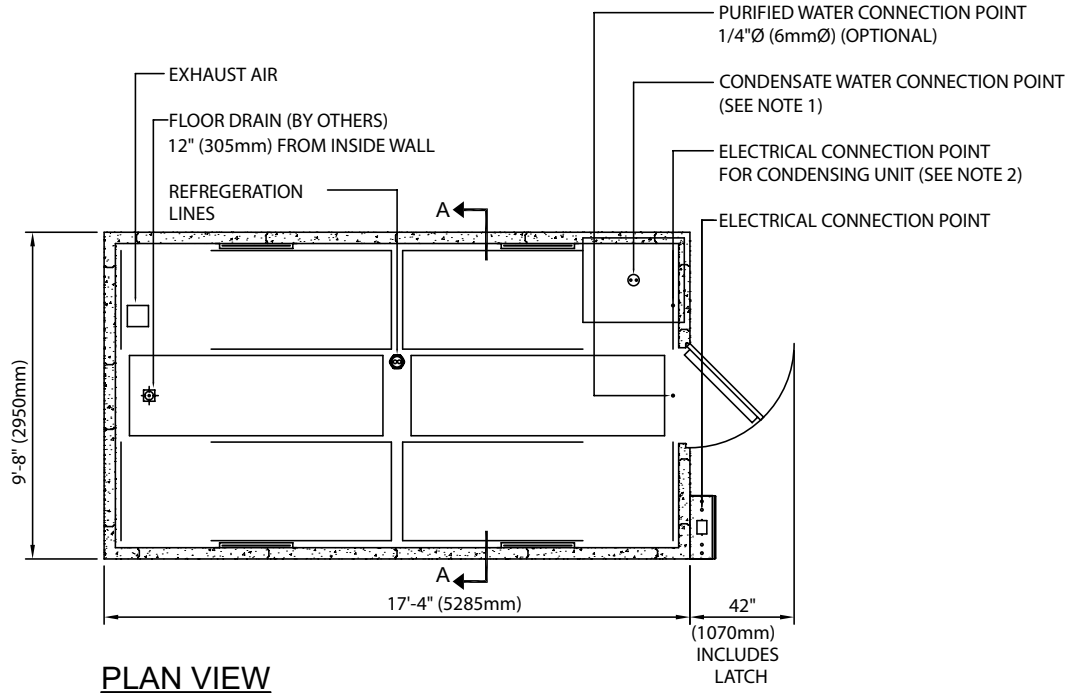

PLAN VIEW

GR96 PLANT GROWTH CHAMBER
DATE ISSUED: 10/20/09
DRAWING NO. 231181

CONVIRON®

CONVIRON MODEL **GR SERIES**

NOTES:

1. STANDARD REFRIGERATION SYSTEM IS WATER COOLED (3/4"Ø (19mmØ) CONNECTION).
2. CONDENSING UNIT REQUIRES SEPERATE ELECTRICAL SERVICE (60HZ APPLICATION ONLY).
3. DEPTH DIMENSION IS CHAMBER SIZE ONLY. DIMENSION DOES NOT INCLUDE DOOR LATCH.
4. LENGTH AND WIDTH DIMENSIONS ±1/4 (6mm). HEIGHT DIMENSION ±1" (25mm).

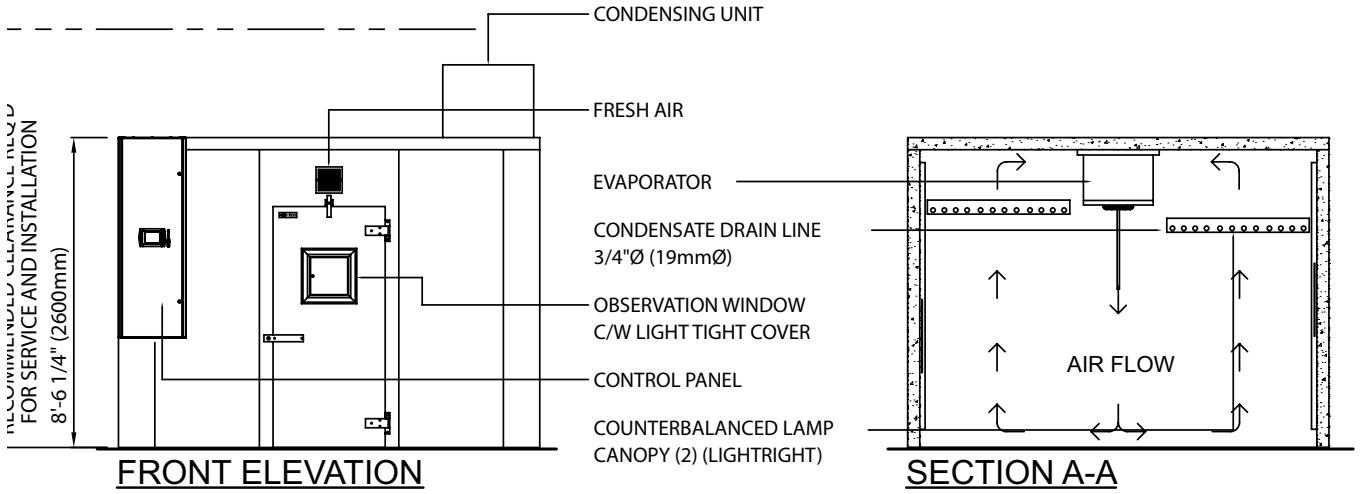

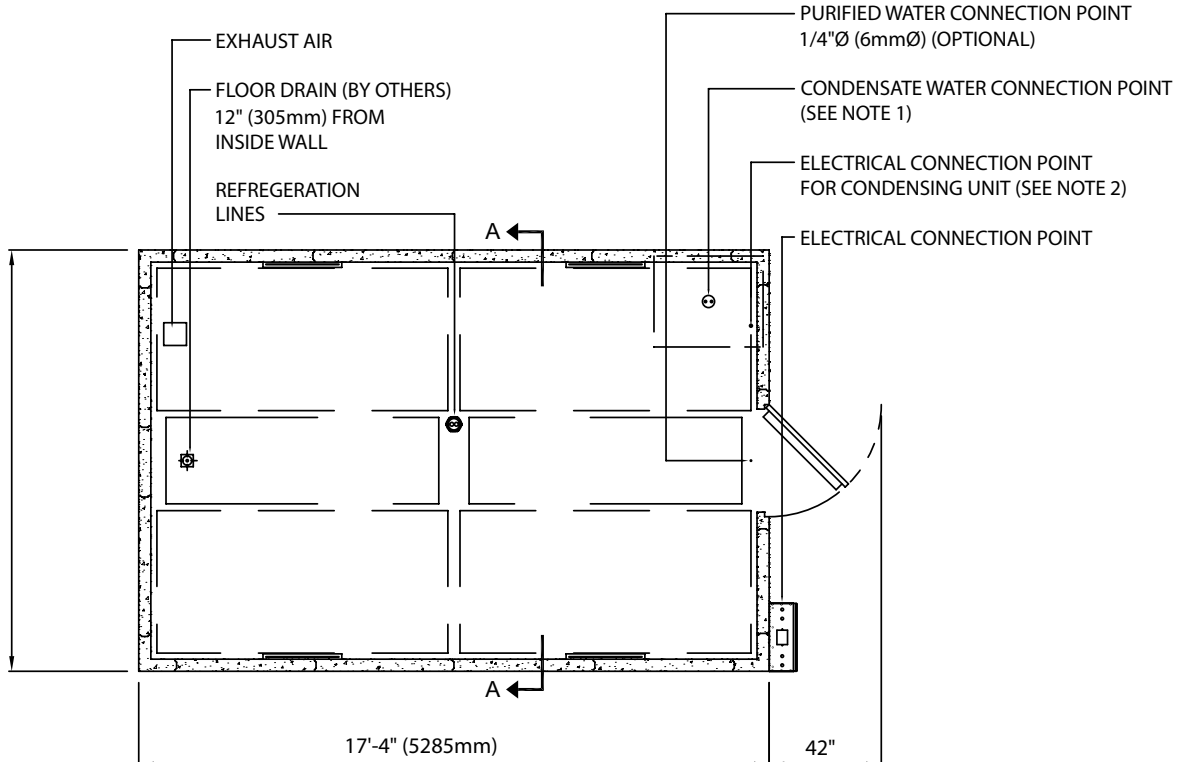

GR128 PLANT GROWTH CHAMBER
DATE ISSUED: 10/20/09
DRAWING NO. 235121

CONVIRON®

CONVIRON MODEL **GR SERIES**

NOTES:

1. STANDARD REFRIGERATION SYSTEM IS WATER COOLED (3/4"Ø (19mmØ) CONNECTION).
2. CONDENSING UNIT REQUIRES SEPERATE ELECTRICAL SERVICE (60HZ APPLICATION ONLY).
3. DEPTH DIMENSION IS CHAMBER SIZE ONLY. DIMENSION DOES NOT INCLUDE DOOR LATCH.
4. LENGTH AND WIDTH DIMENSIONS ±1/4 (6mm). HEIGHT DIMENSION ±1" (25mm).

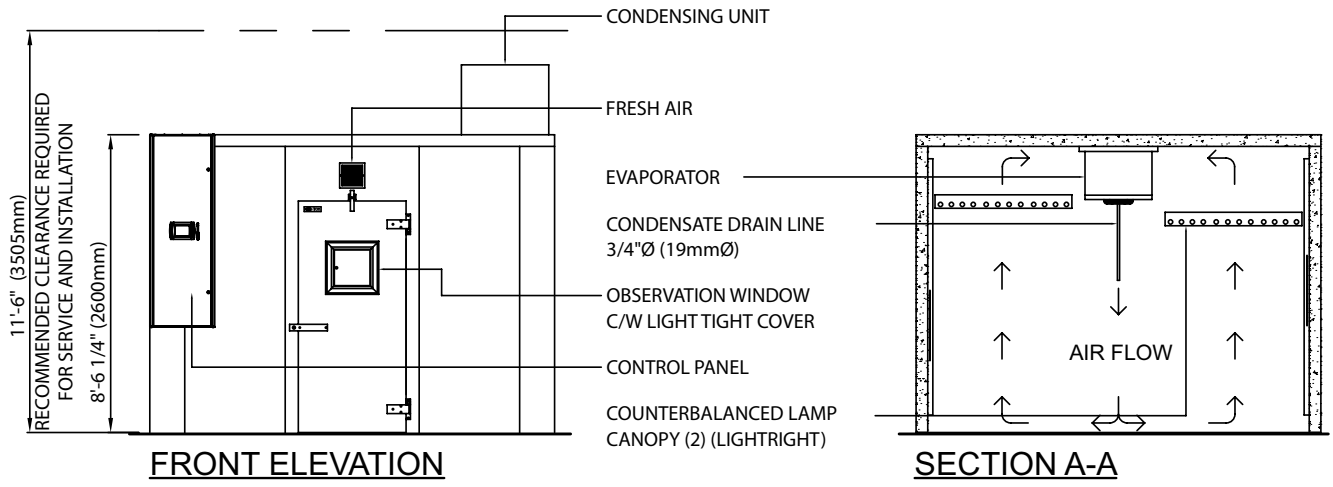

FRONT ELEVATION

SECTION A-A

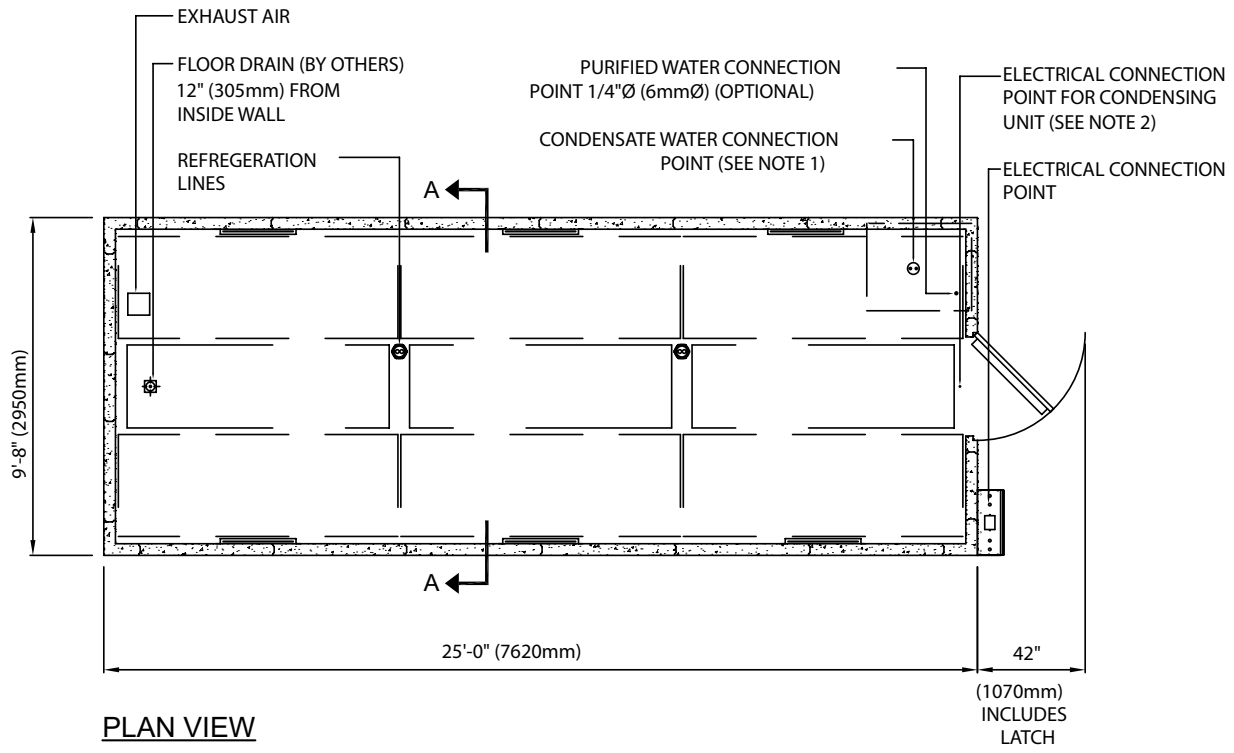

PLAN VIEW

GR144 PLANT GROWTH CHAMBER
DATE ISSUED: 10/20/09
DRAWING NO. 231182

CONVIRON®

CONVIRON MODEL **GR SERIES**

NOTES:

1. STANDARD REFRIGERATION SYSTEM IS WATER COOLED (3/4"Ø (19mmØ) CONNECTION).
2. CONDENSING UNIT REQUIRES SEPERATE ELECTRICAL SERVICE (60HZ APPLICATION ONLY).
3. DEPTH DIMENSION IS CHAMBER SIZE ONLY. DIMENSION DOES NOT INCLUDE DOOR LATCH.
4. LENGTH AND WIDTH DIMENSIONS ±1/4 (6mm). HEIGHT DIMENSION ±1" (25mm).

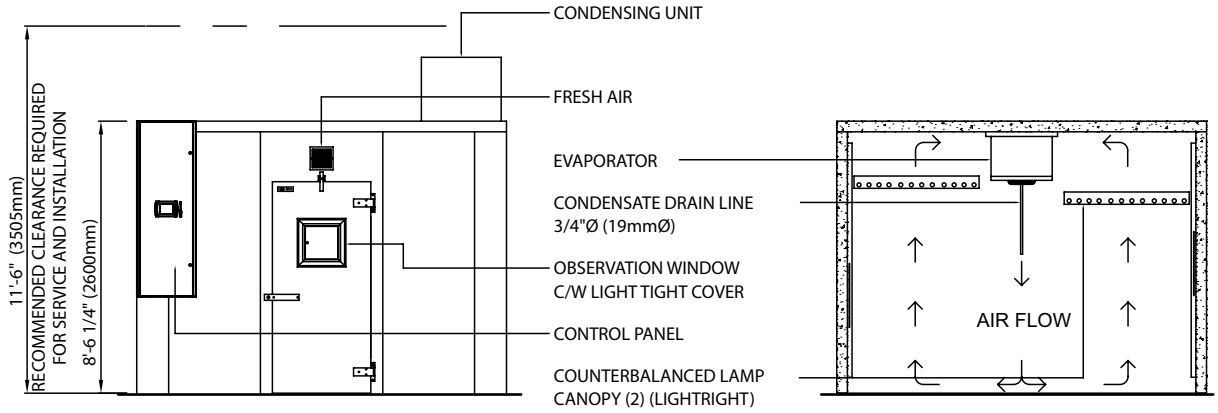

FRONT ELEVATION

SECTION A-A

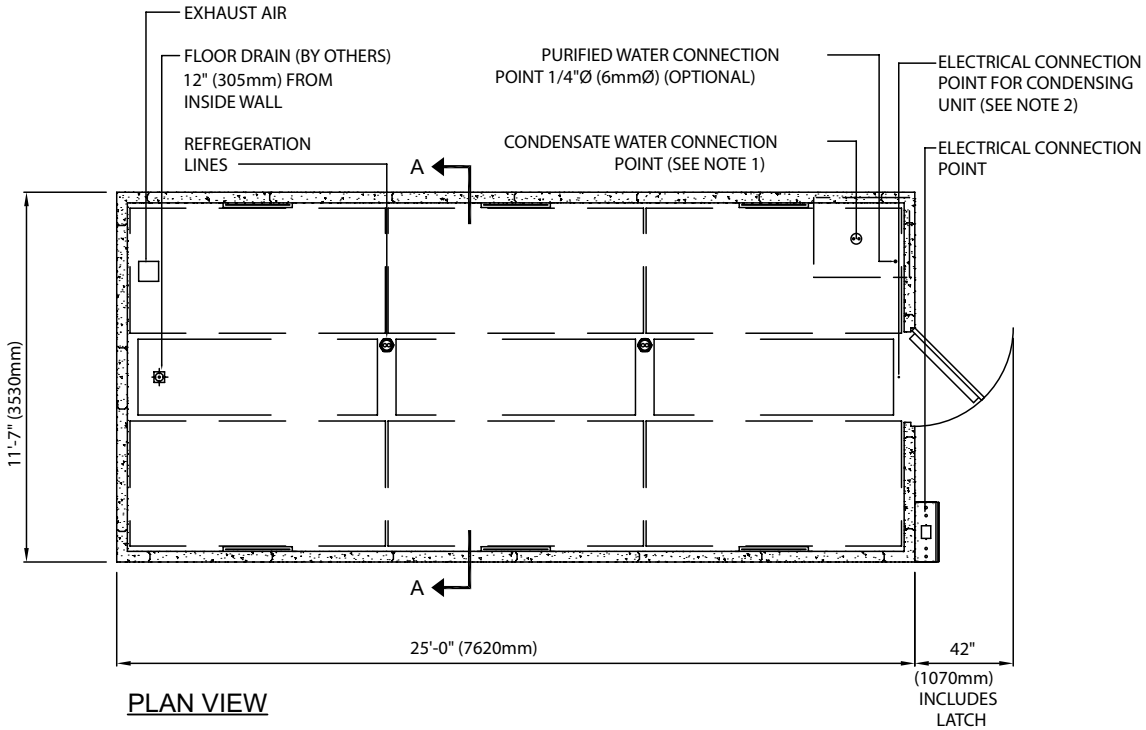

PLAN VIEW

GR192 PLANT GROWTH CHAMBER

DATE ISSUED: 10/20/09

DRAWING NO. 231183

REF: SPEC - GR'S Rev.: 25, 28-Jun-17

©2017 Controlled Environments Limited. Conviron is a registered trademark of Controlled Environments Limited. All other trademarks are the property of their respective owners. Information subject to change without written notice.

CONVIRON®